Al Hamra Tower, Kuwait City, Kuwait

Introduction to Vertical Transportation Systems
Prepared for AIA Michigan – July 22, 2020

VDA® (Van Deusen & Associates)

CONTINUING EDUCATION AIA

vda

VDA Delivering Elevator Consulting Services Worldwide

Dion Cooper
Senior Associate
dcooper@vdassoc.com
313-518-3219

Brian Moran
Associate
bmoran@vdassoc.com
586-419-2301

- New Construction
- Modernization
- Program Management
- Maintenance Quality Control
- Equipment Evaluations
- Contract Administration
- Adaptive Reuse
- Peer Review

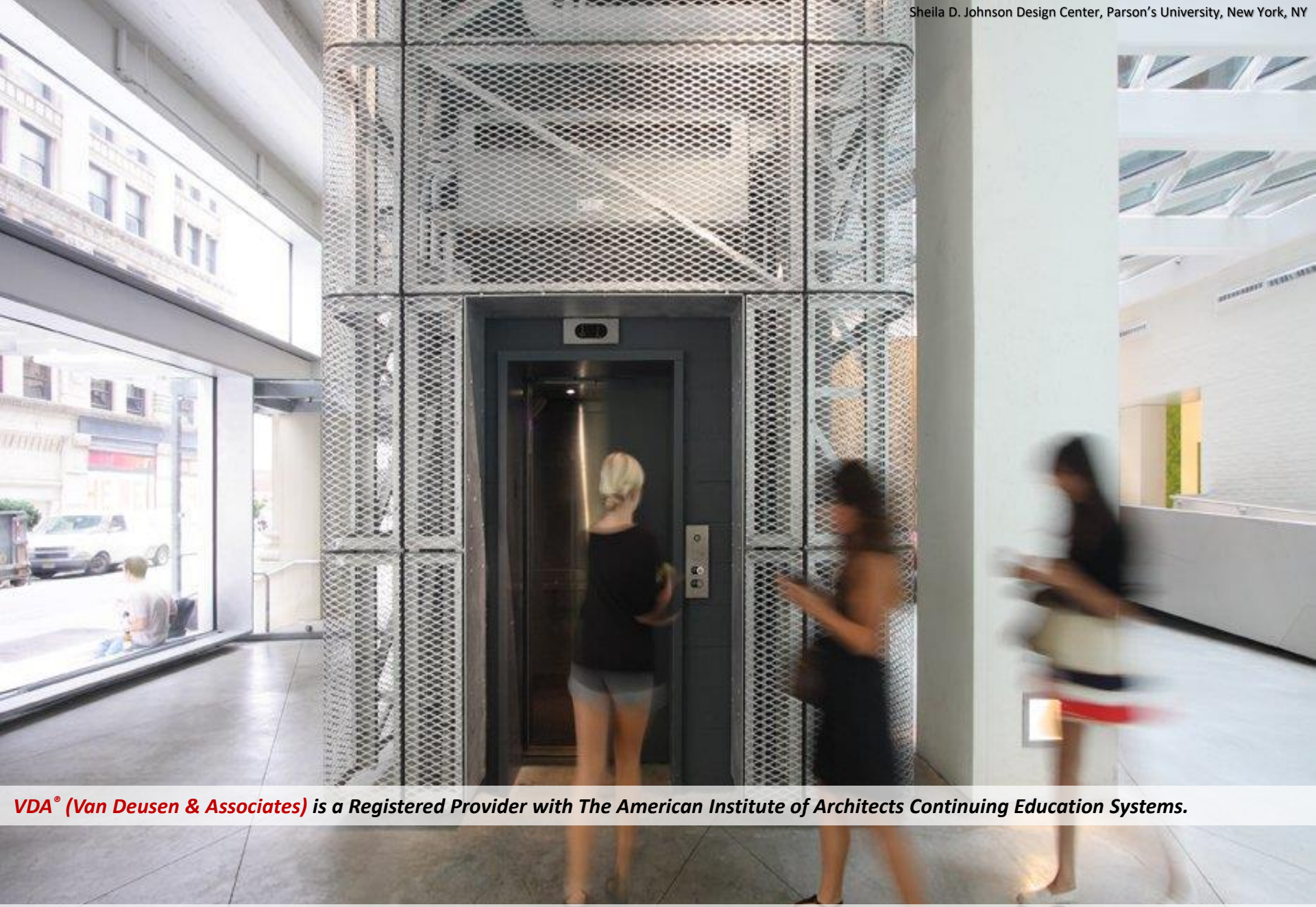

Sheila D. Johnson Design Center, Parson's University, New York, NY

VDA® (Van Deusen & Associates) is a Registered Provider with The American Institute of Architects Continuing Education Systems.

This presentation is protected by US and International copyright laws. Reproduction, distribution, display and use of the presentation without written consent of the speaker is prohibited.

© VDA® (Van Deusen & Associates) 2012

Learning Objectives

- Differentiate basic elevator, escalator and miscellaneous lift applications
- Review elevator standards and elevator code requirements
- Evaluate basic elevator application guidelines
- An overview of elevator design criteria and learn basics of elevator traffic studies
- Identify the Elevators & Escalators features that will have impact on Sustainable Building Design and LEED process
- Destination Dispatching Technology

Vertical Transportation Systems

Elevators

- Passenger, Service, and Freight

Escalators & Moving Walks

Specialty Lifts

- Wheelchair Lift
- Residential Elevators
- Dumbwaiter

Types of Elevators

Hydraulic Elevators

Holed Units with In-Ground Cylinders

Holeless Elevators with:

- Single or Dual-Stage Cylinders
- Single or Dual-Roped Cylinders
- Cantilevered Design
- Counterweighted Hydraulic Elevators

Traction Elevators

Geared Traction Units

- Mid Rise Application

Gearless Traction Units

- Mid & High Rise Application

Machine Roomless Units (MRL)

- Low & Mid Rise Applications

Hydraulic Elevators

Holed Units

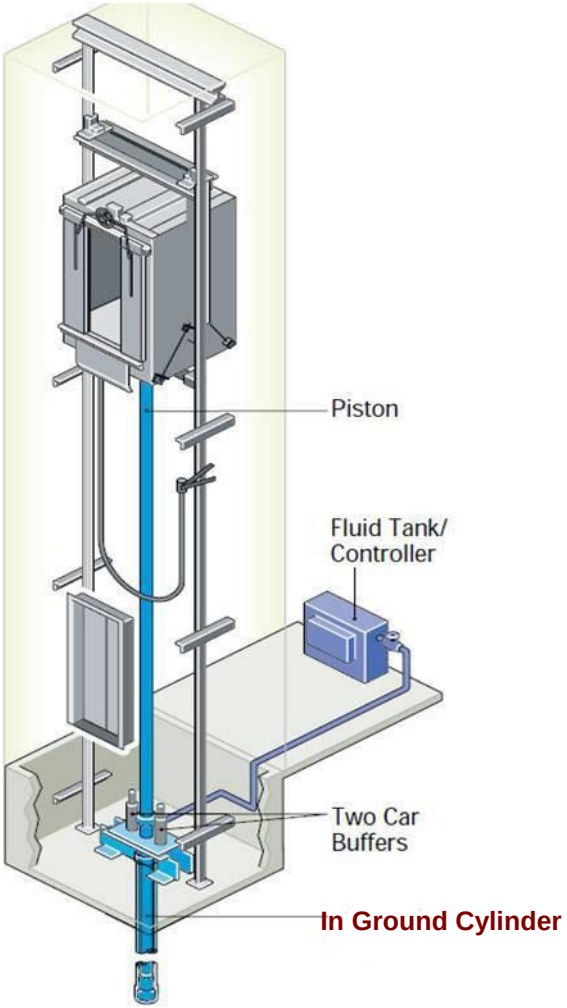

Holeless Units

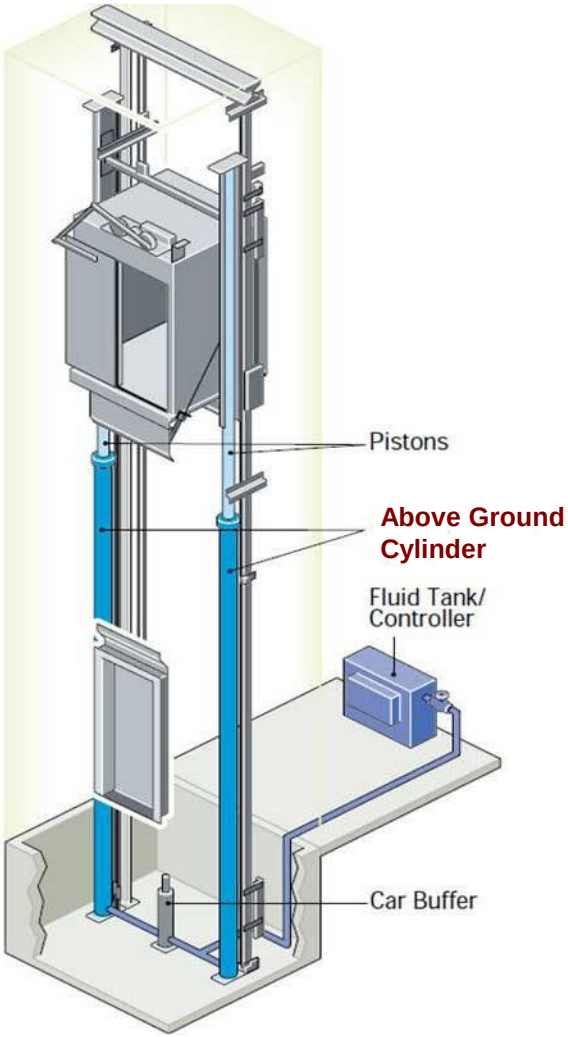

Roped Holeless Units

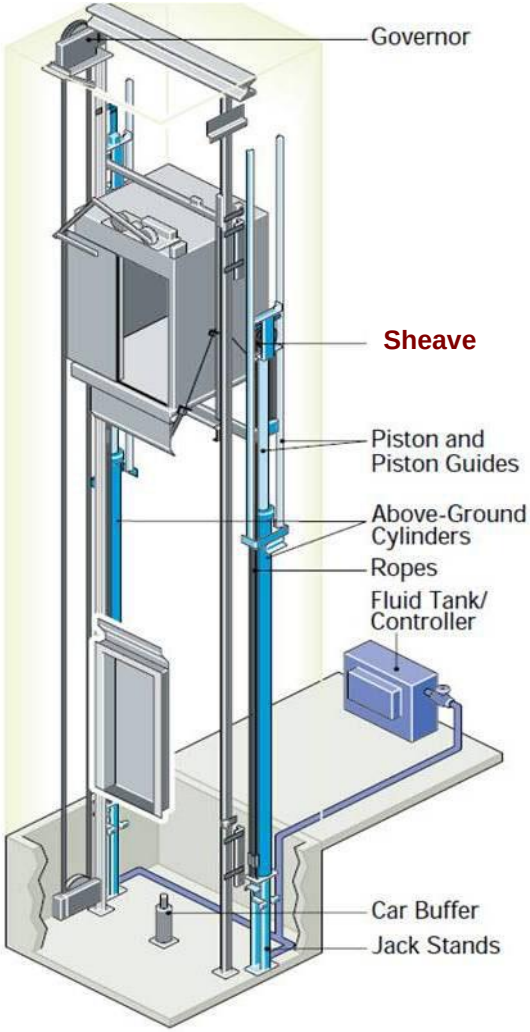

Traction Elevators

Geared Elevators – Mid Rise

- Worm and gear drive
- Overhead, Basement, Underslung

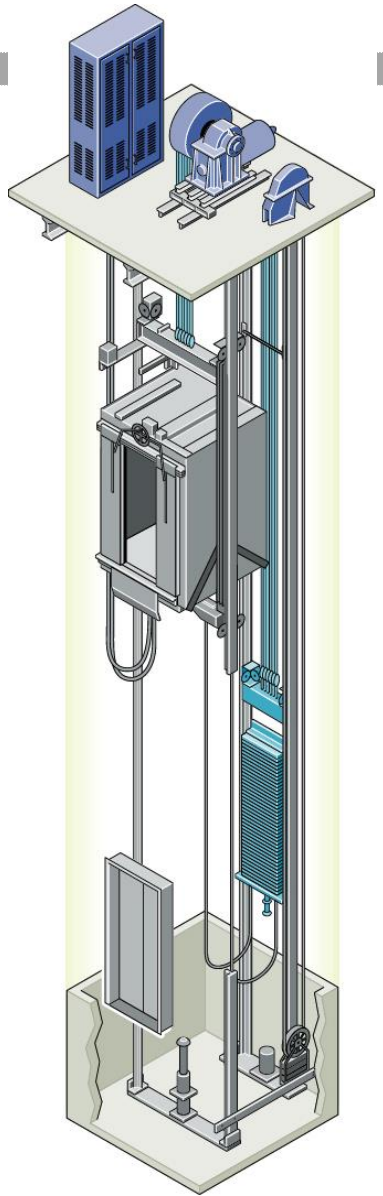

Traction Elevators

Gearless Elevators

- Drive sheave directly attached to motor armature
- Overhead, DC Motors, AC PM Motors

High Rise Gearless

Super High Rise Gearless

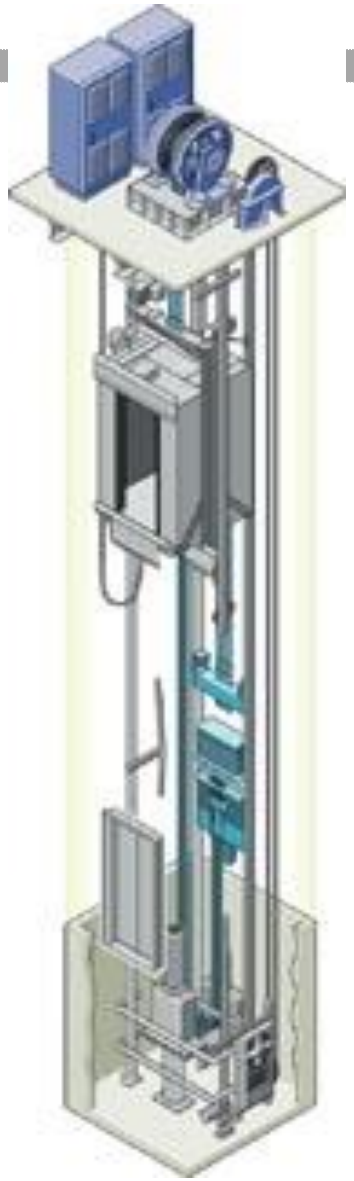

Machine Roomless Elevators (MRLs)

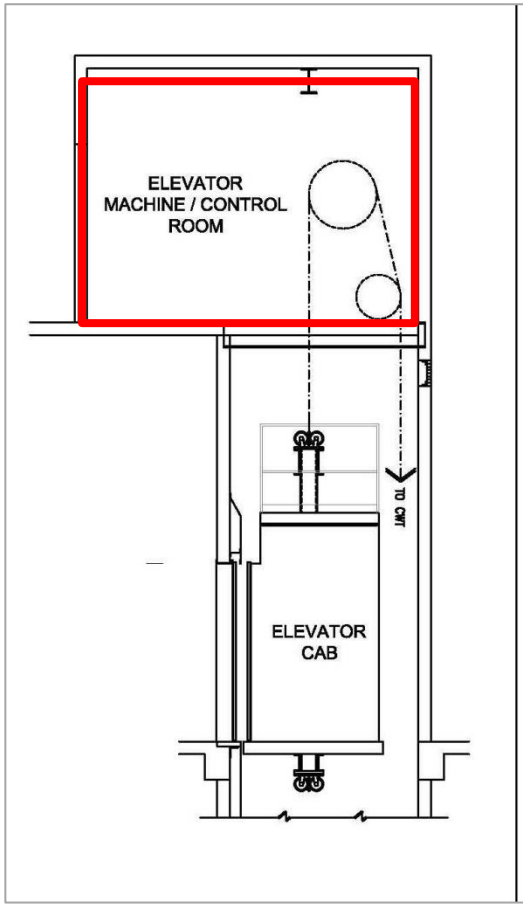

Conventional Machine Room

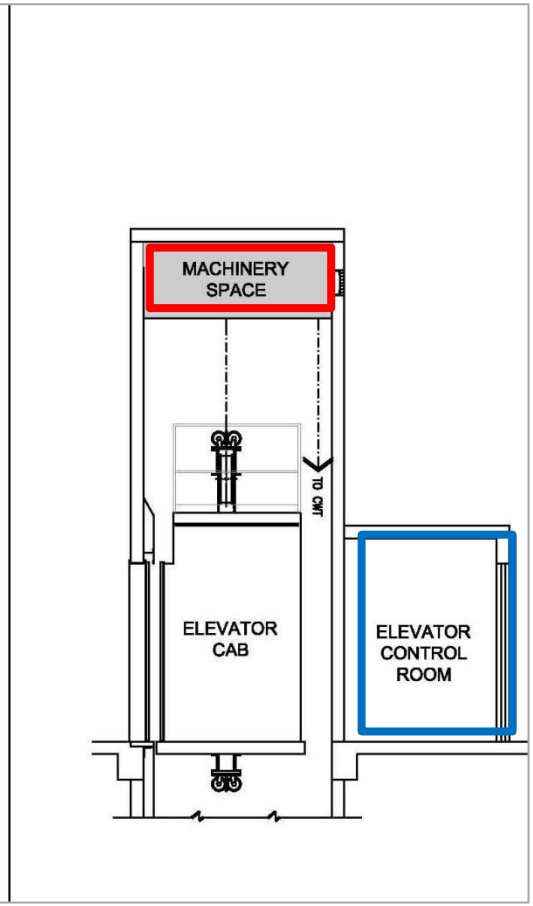

MRL Layout

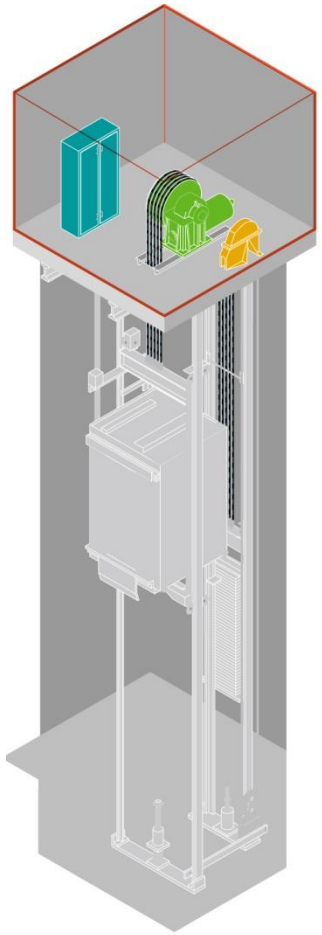

Conventional Machine Room

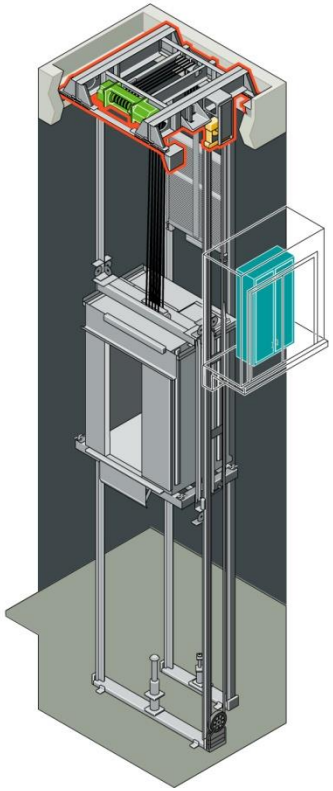

MRL Layout

Machine Roomless Elevators (MRLs)

MRL – Evolved because of new *Machine* technology

- Smaller more Efficient Motors
- AC Gearless Technology
- Flat Belts in lieu of Rope Cables
- Considered 'GREEN'

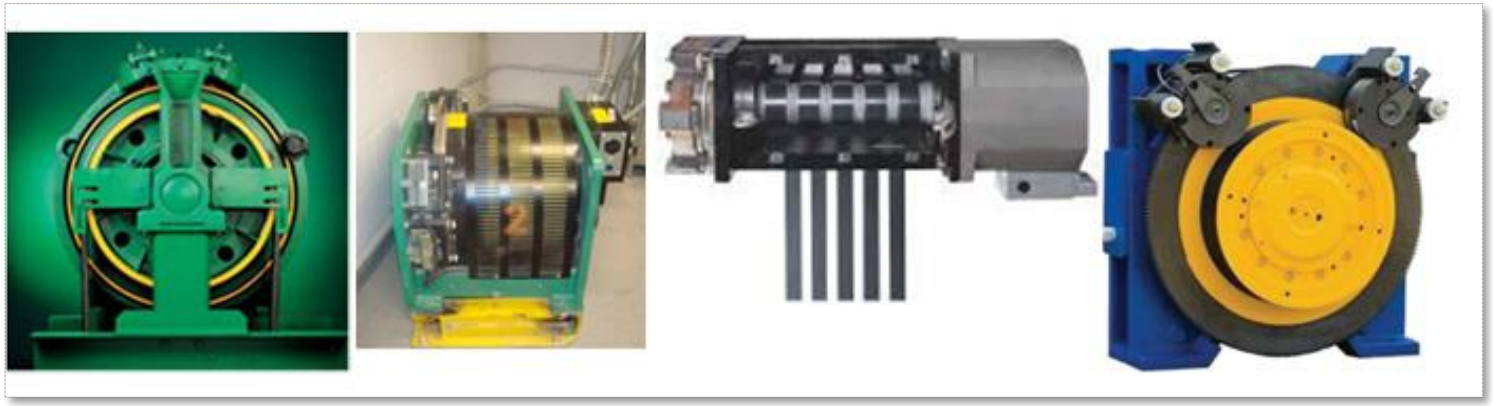

Kone Schindler Otis Thyssenkrupp

Machine Roomless Elevators (MRLs)

Structural Support Methods or Cassette unit

- ***Pancake*** machine, car and counterweight dead-end hitches mounted to guide rails
- ~~All loads transferred down to pit floor~~
- ~~Eliminates~~ need for overhead machine support beams and building structure for elevators

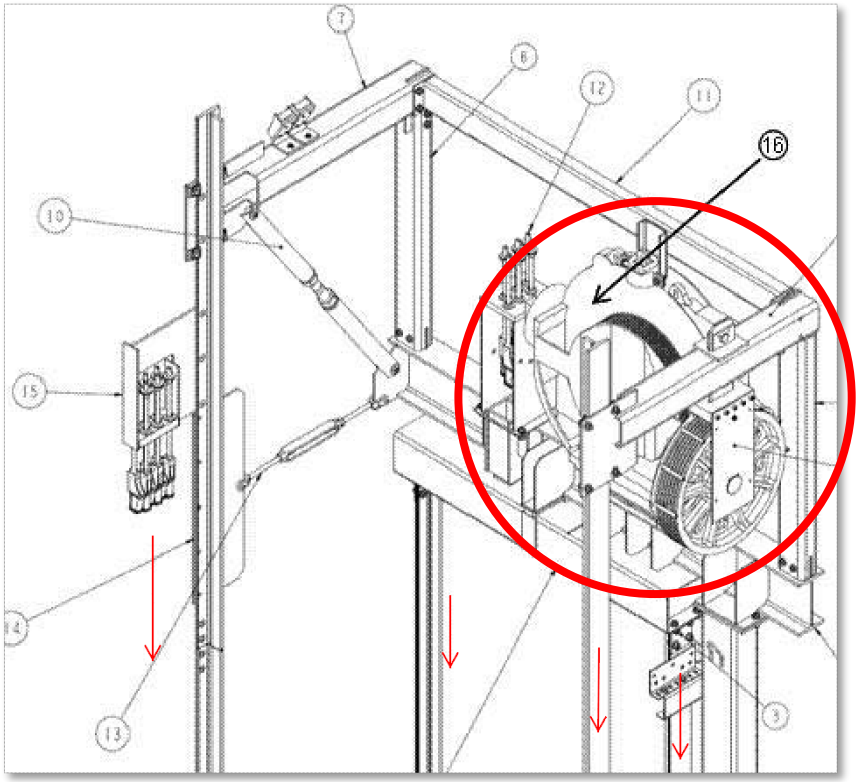

Pancake or cassette, the MRL machines are smaller and more efficient .

Additional Notes on MRLs

"Machine Room Less Actually means the top floor of your building becomes the machine room"

Otis Gen2 System (only hoistway needed)

Conventional MRL

Additional Notes on MRLs

- Underslung vs. Overslung MRL machine options
  - Limitations by vendor for machine placement
  - Impact to HW size requirements
- The ability to vary from manufacturer standard packages is very limited
  - Particularly on the baseline entry level products
- Options for cab interiors and fixtures is very limited
- Price increase to move away from the baseline level packages is significant
- Variances between MRL systems from different vendors, potential impact to related work by GC and others

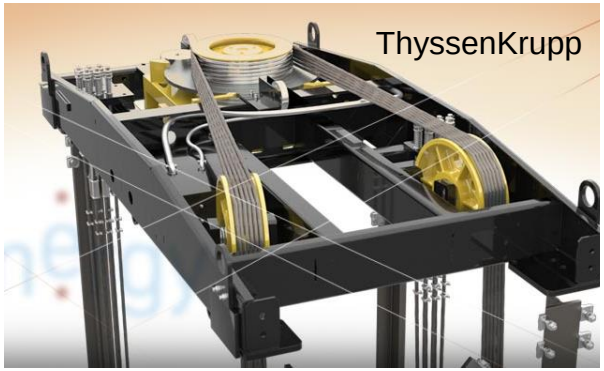

Freight Elevator Classifications

Three basic Freight elevator loading Classes: 'A, B and C'

- Used for material goods transport
- Carries no passengers
- Variations on platform design based on how the elevator is loaded.
- Requires special design and coordination with structural engineer

Class "A"

- General Freight Loading
- Where no item (including loaded truck) weighs no more than 1/4 rated capacity
- Rating not less than 50 lb/ft²

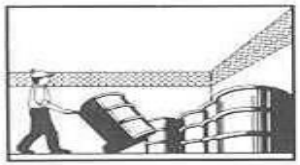

Class "B"

- Motor Vehicle Loading (Automobiles, trucks, buses)
- Rating not less than 30 lb/ft²

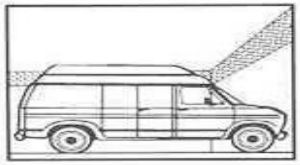

Class "C1"

- Industrial Truck Loading
- Where truck is carried
- Rating not less than 50 lb/ft²

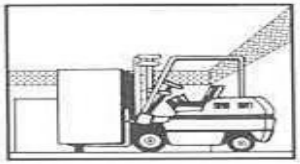

Class "C2"

- Industrial Truck Loading
- Where truck is not carried, but is used for loading and unloading
- Rating not less than 50 lb/ft²

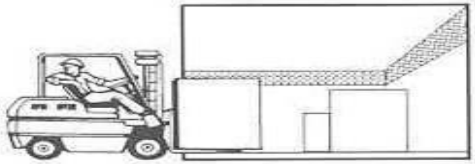

Class "C3"

- Concentrated Loading
- (No truck used) but load increments are more than 1/4 rated capacity
- Rating not less than 50 lb/ft²

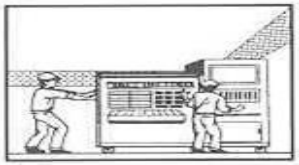

Minimum ADA Elevator Requirements

For New Construction

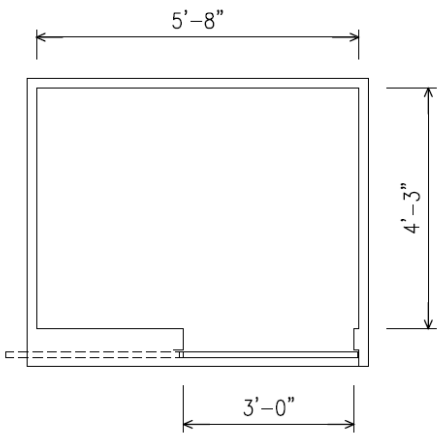

2000# CAPACITY

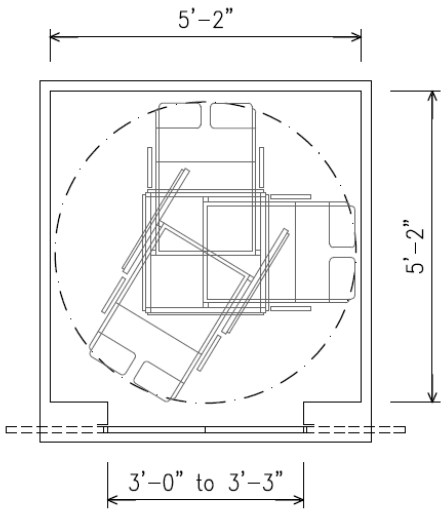

2500# CAPACITY

For Existing Construction

Where existing shaft configuration or technical Infeasibility prohibits strict compliance with ADA requirements for new construction, the minimum car plan dimensions may be reduced by the minimum amount necessary, but in no case shall the inside car area be smaller than 48 in by 48 in.

Stretcher Handling Elevators

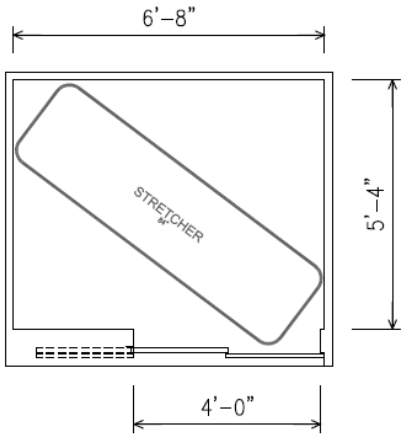

3500#
STRETCHER: 84"

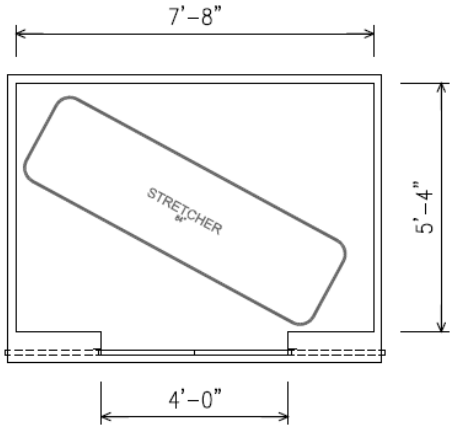

4000#
STRETCHER: 84"

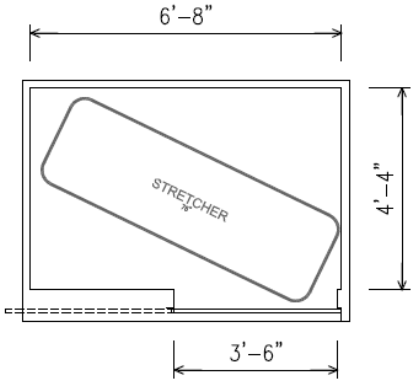

2500#
STRETCHER: 76"

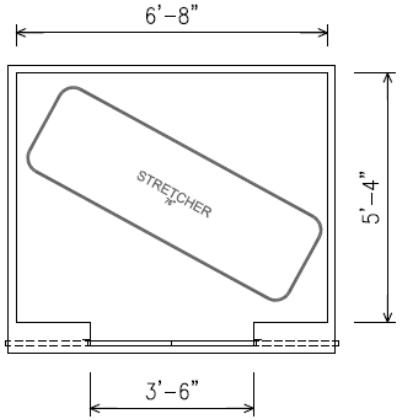

3500#
STRETCHER: 76"

Standard Elevator Capacities and Speed

- Passenger Elevator Capacities: 2,000 / 2,500 / 3,000 / 3,500 / 4,000 pounds
- Standard Service Elevator Capacities: 4,500 / 5,000 pounds
- Hydraulic Passenger Elevator Speeds: 50 to 200 fpm
- Geared Traction Elevator Speeds: 200 to 450 fpm
- MRL Speeds: 200 to 500 fpm
- Gearless Traction Elevator Speeds: 500 to 2,000 fpm
- Service Elevator Speeds: 200 to 1000 fpm

Passenger Elevator Loading Conditions

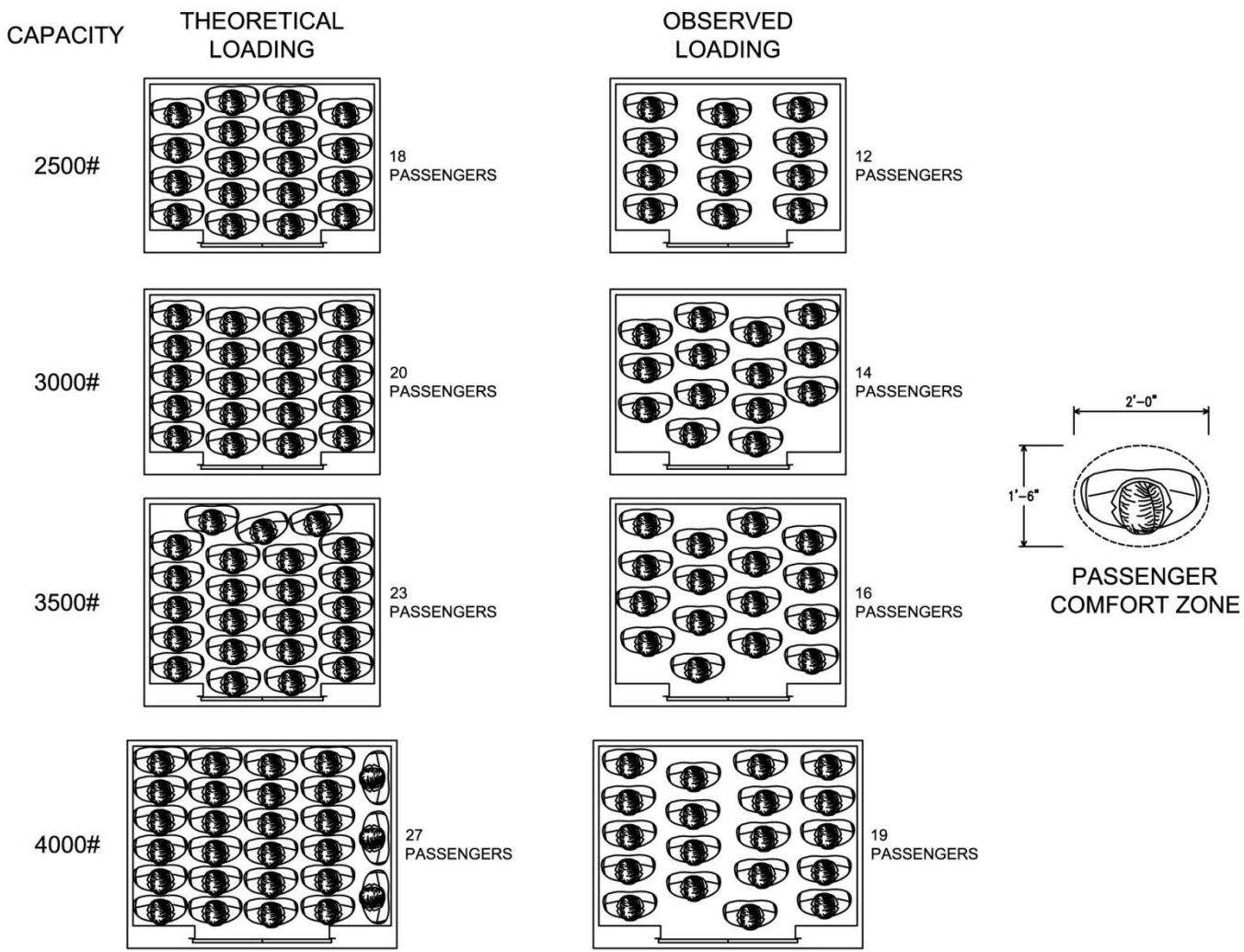

Elevator Application Guidelines

	Hydraulic Elevators	Machine RoomLess (MRL) Elevators	Geared Traction Elevators	Gearless Traction Elevators
Application	Low-Rise (Up to 65 feet)	Low & Mid Rise (Up to 250 feet)	Mid-Rise (Up to 250 feet)	High Rise (Up to 2,000 feet)
Initial Cost	Low	Medium	Medium	High
Maintenance Cost	Low - $150 to $350 per month	Medium - $350 to $750 per month	Medium - $350 to $600 per month	High - (based on application) $1,000 to $3,000 per month
Energy Consumption	High	Low	Medium	Low to Medium
Speed Limitation	Up to 200 fpm	200 to 500 fpm	200 to 500 fpm	700 to 2,000 fpm
Pit Depth	4 to 5 feet	5'-6" to 7'-6"	5 to 7 feet	Function of car speed - can be as deep as 25 feet
Overhead Requirements (Last Landing to Machine Room Slab)	Minimal - around 12'-6"	14'-0" to 17'-6"	Not more than 16 to 19 feet	Up to 25 feet
Machine Room Location/Height	Adjacent to or not more than 50 feet away from hoistway	Within the hoistway	Adjacent to or over the hoistway	Overhead
Structural Loads	At pit only	At pit or overhead	At pit and overhead	At pit and overhead

Elevator Lobby Dimensional Requirements

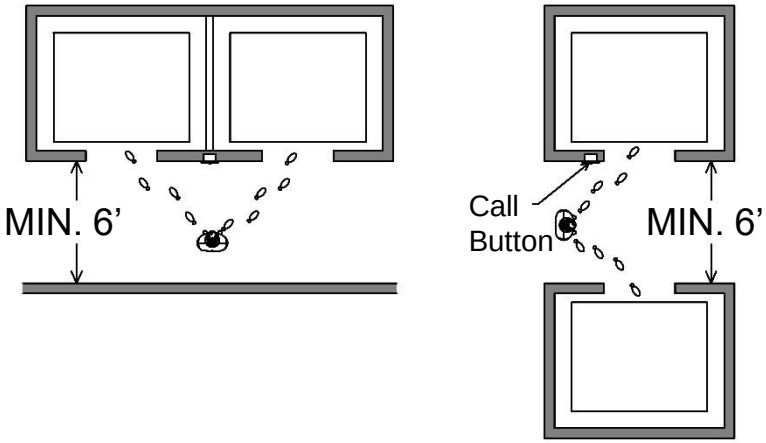

TWO CAR ARRANGEMENTS

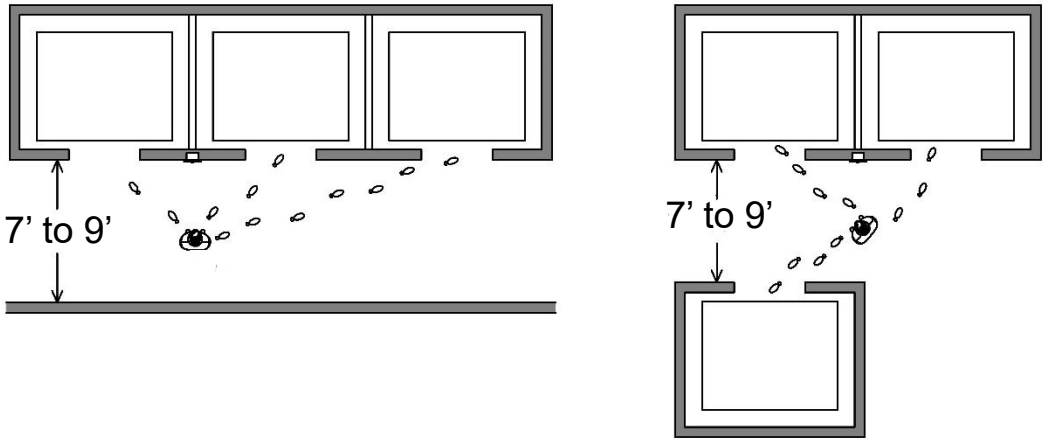

THREE CAR ARRANGEMENTS

Elevator Lobby Dimensional Requirements

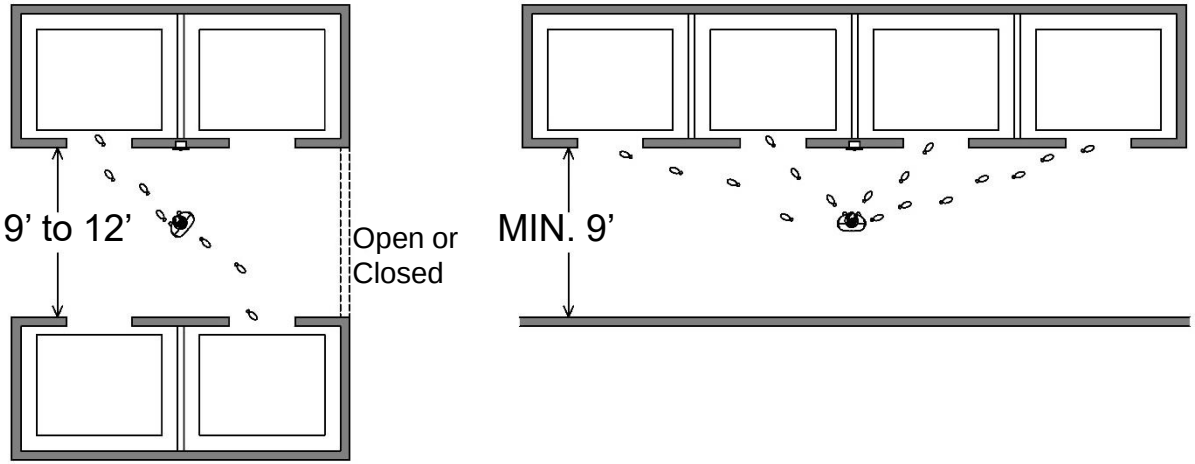

FOUR CAR ARRANGEMENTS

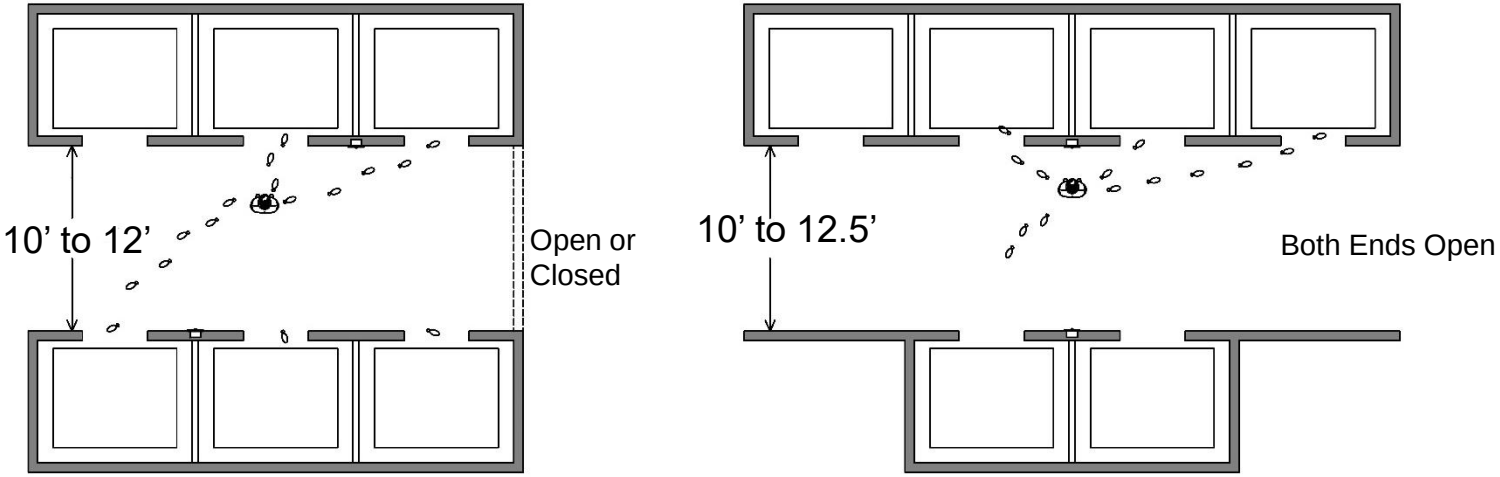

SIX CAR ARRANGEMENTS

Typical Passenger Elevator Entrances

Type: Single Speed Side Opening Doors

- Sizes: 36 and 42 inches
- Use: On light duty passenger elevators and some service cars
- Characteristics: Slow operation. Should not be used for openings wider then 42 inches

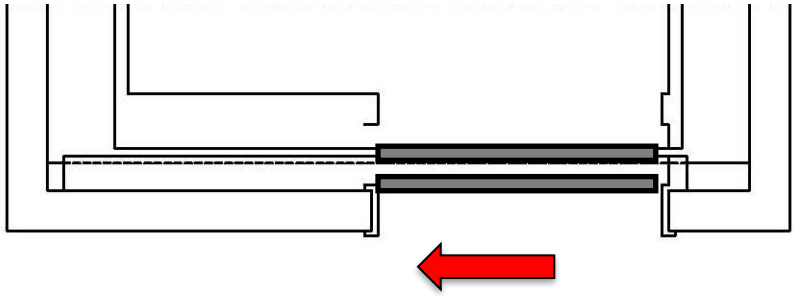

Type: Single Speed Center Opening Doors

- Sizes: 42, 48 and 54 inches
- Use: On all passenger elevators and some service cars
- Characteristics: Very efficient and quick performance. Should not be used for openings wider than 60 inches

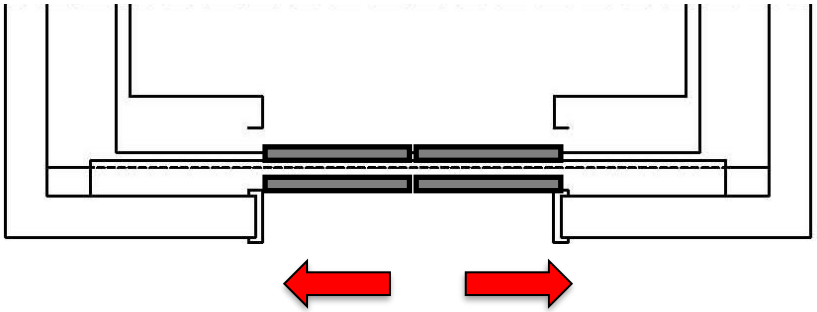

Passenger & Service Elevator Entrances

Type: Two Speed Side Opening Doors

- Sizes: 42, 48 and 54 inches
- Use: On all service elevators and some passenger cars
- Characteristics: Mostly used on service cars. Operates with acceptable performance times

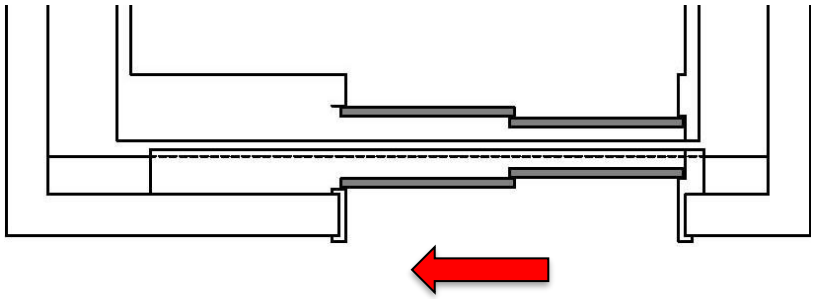

Type: Two Speed Center Opening Doors

- Sizes: 48 to 108 inches
- Use: On oversized passenger (shuttle) elevators and some service cars
- Characteristics: Very versatile and operates with quick performance times.

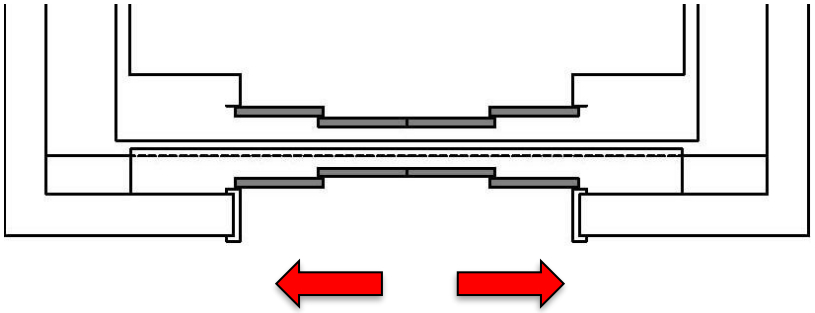

Special Service Elevator Entrances

Type: Three Speed Side Opening Doors

- Sizes: 54 to 72 inches
- Use: On all service elevators and some passenger cars
- Characteristics: Mainly used on service cars and has slow performance times

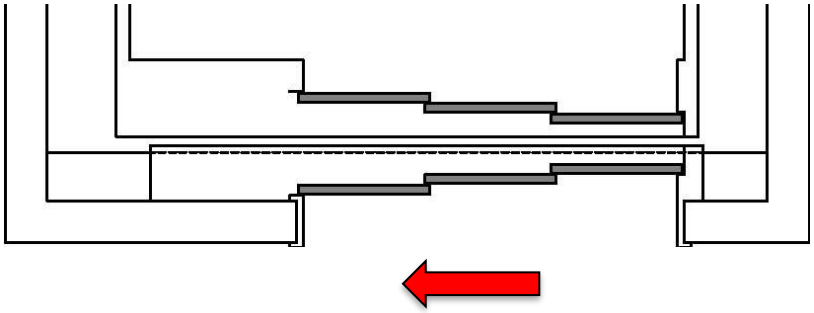

Type: Three Speed Center Opening Doors

- Sizes: 72 to 120 inches
- Use: Seldom used on passenger (shuttle) elevators and mostly used on service and freight cars
- Characteristics: Very versatile and operates with quick performance times.

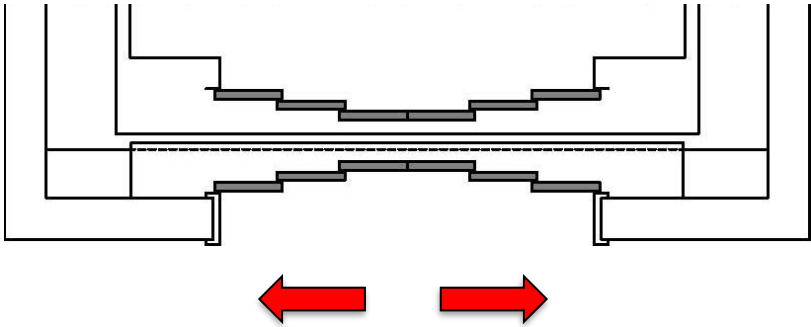

Escalators & Moving Walks

Escalators

Moving Walks

Glass Balustrade

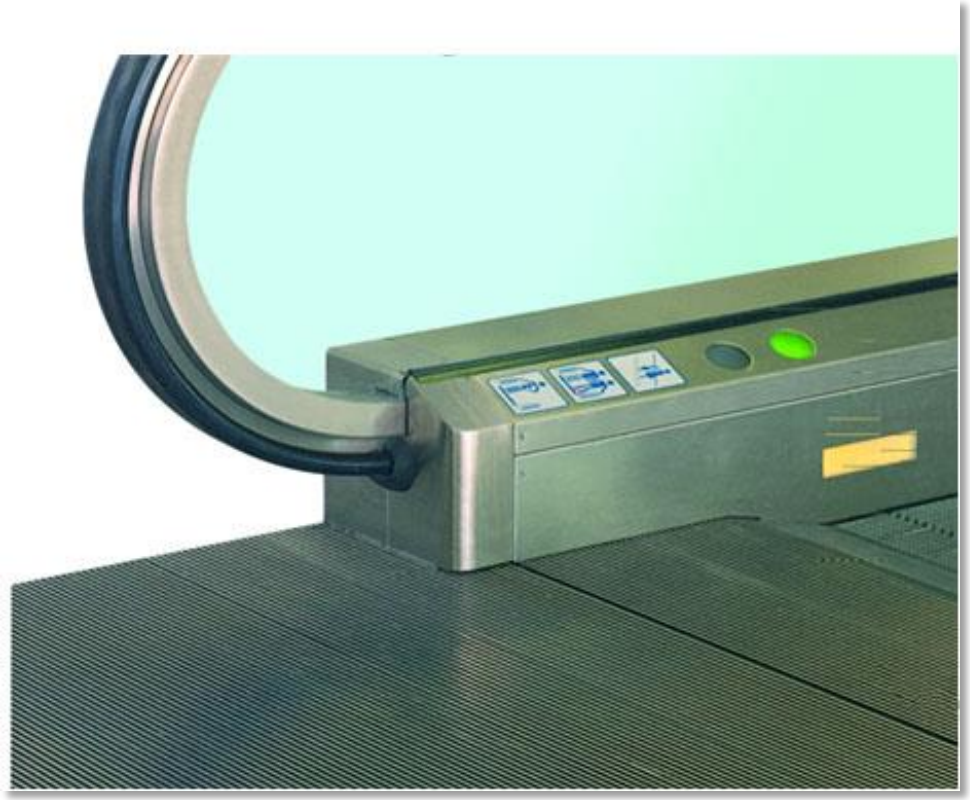

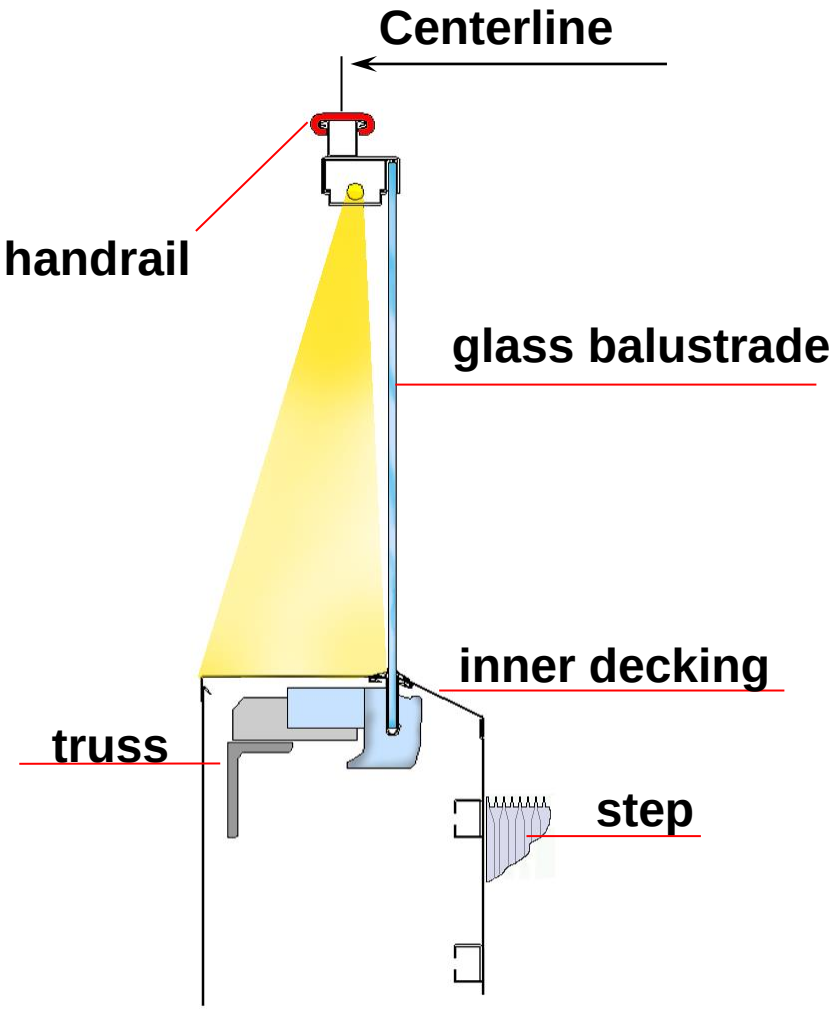

Solid Balustrade

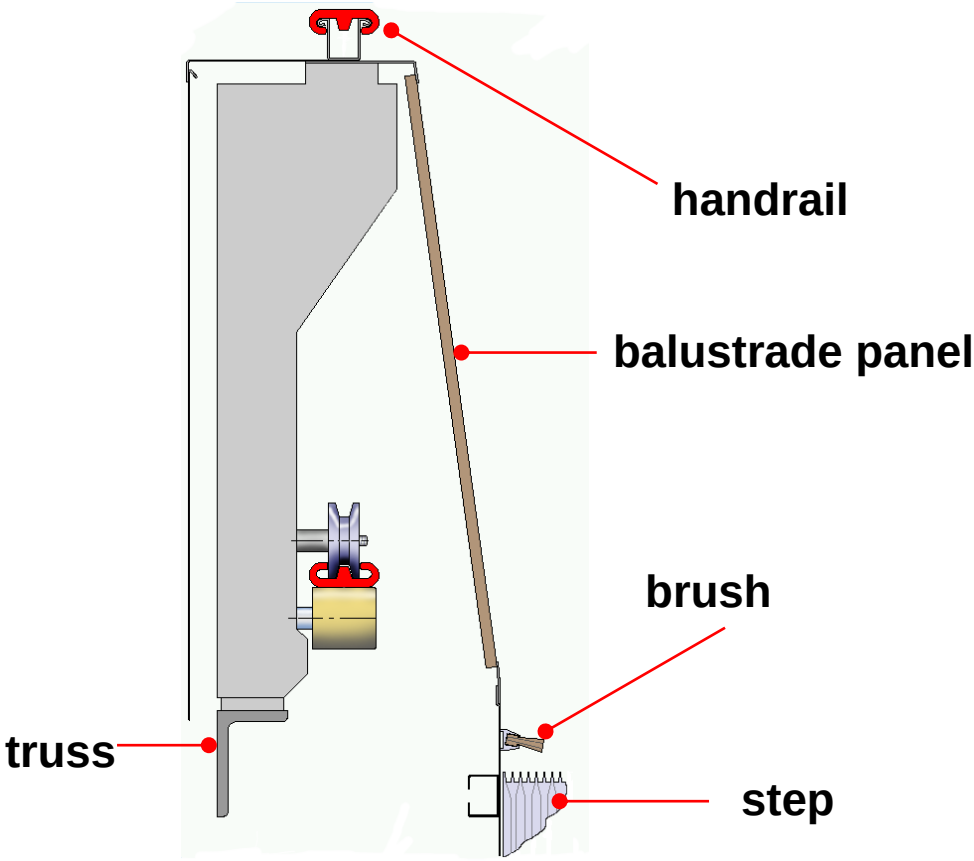

Escalators & Moving Walks

	Escalators	Moving Walks
Step Widths:	24, 32 and 40 inches (Pallet steps)	32, 40, and 56 inches (Pallet steps or belts)
Speed:	100 fpm (nominal)	100 fpm (nominal)
Rise:	Up to 20' standard without an intermediate support. Maximum rise 100 ft. (multiple drive units and intermediate supports)	N/A
Travel:	Vertical incline 30 degrees in US	Horizontal with a incline up to 12 degrees max
Length:	N/A	Up to 400 feet for horizontal units
Balustrades:	Solid or Glass	Solid or Glass

Escalator Support Details

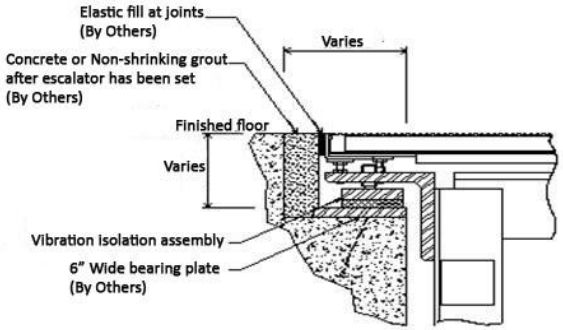

TYPICAL CONCRETE SUPPORT

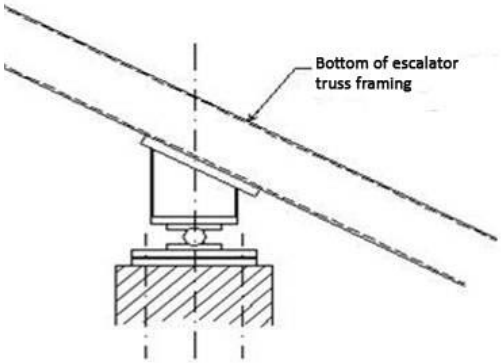

INTERMEDIATE SUPPORT

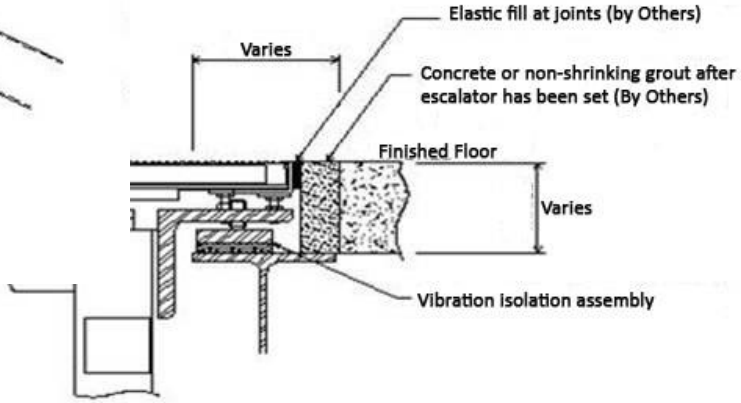

Typical Steel Support

Safety Zone for Escalators

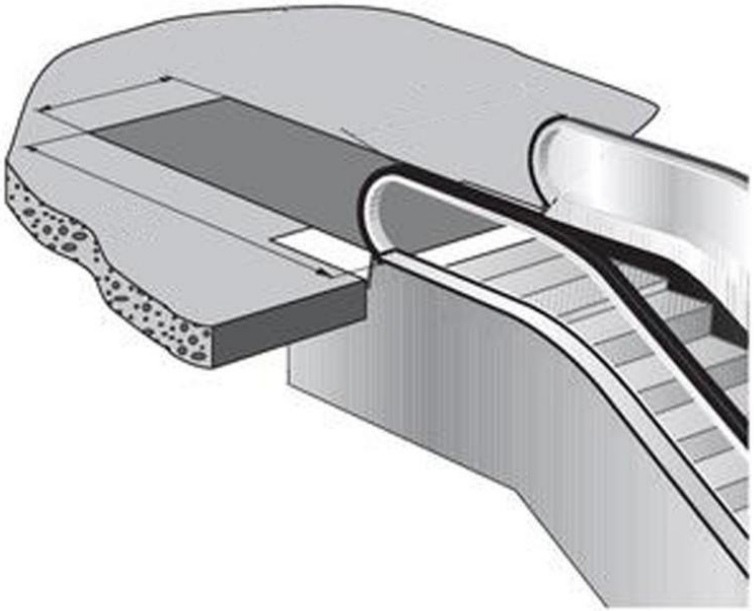

Safety Zone as required by ASME A17.1.

Width: No less than the width between the centerlines of the handrails plus 8 inches (203mm).

Length: Not less than twice the Distance between the center- lines of the handrails, measured from the end of the newel. Every consideration should be given to traffic patterns.

Crisscross Escalators

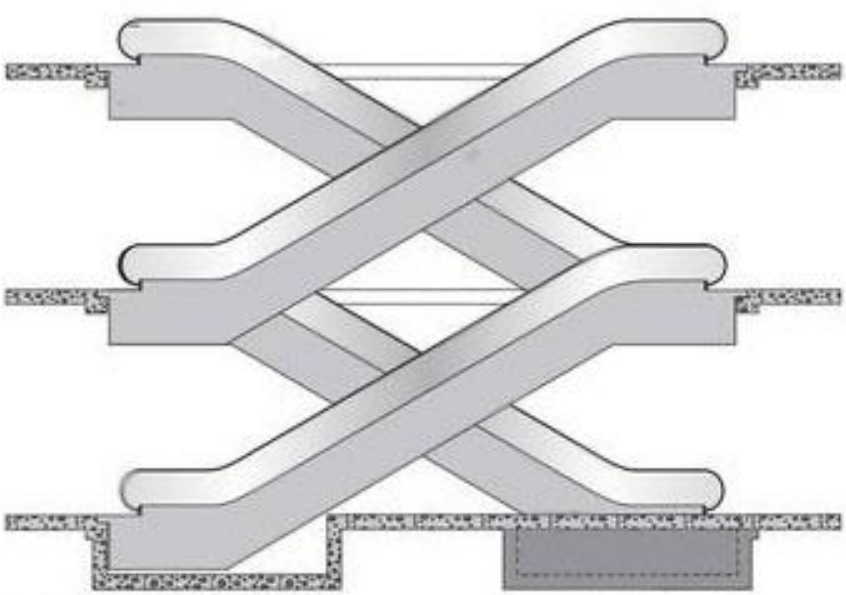

Side View

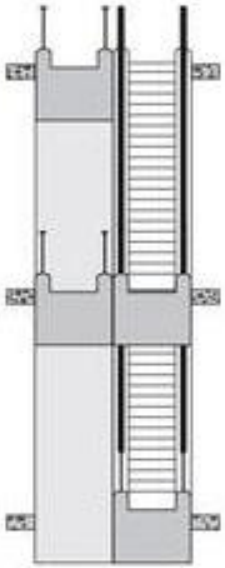

Front cross-section
from floor to floor

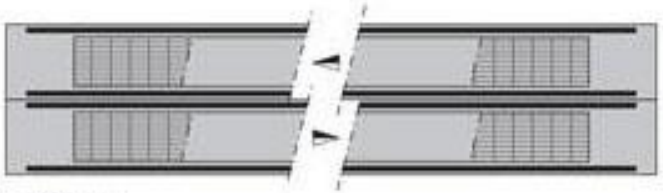

Plan View

Parallel Stacked Escalators

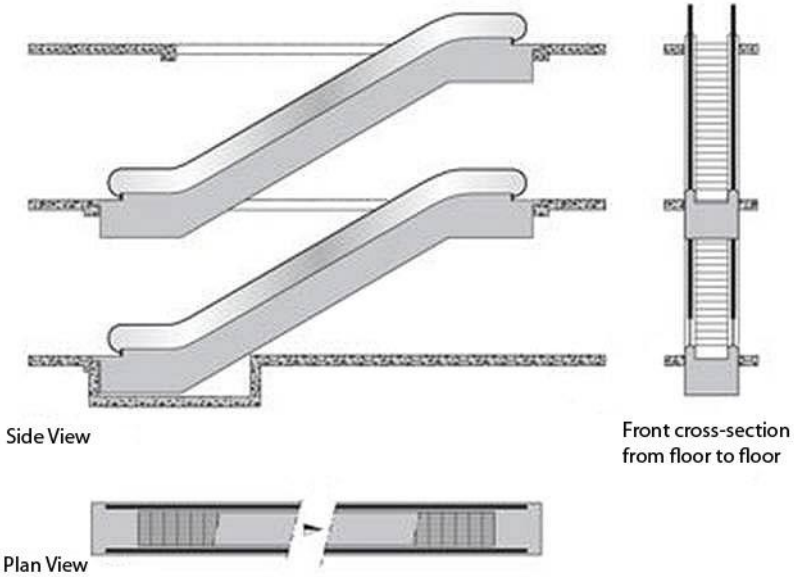

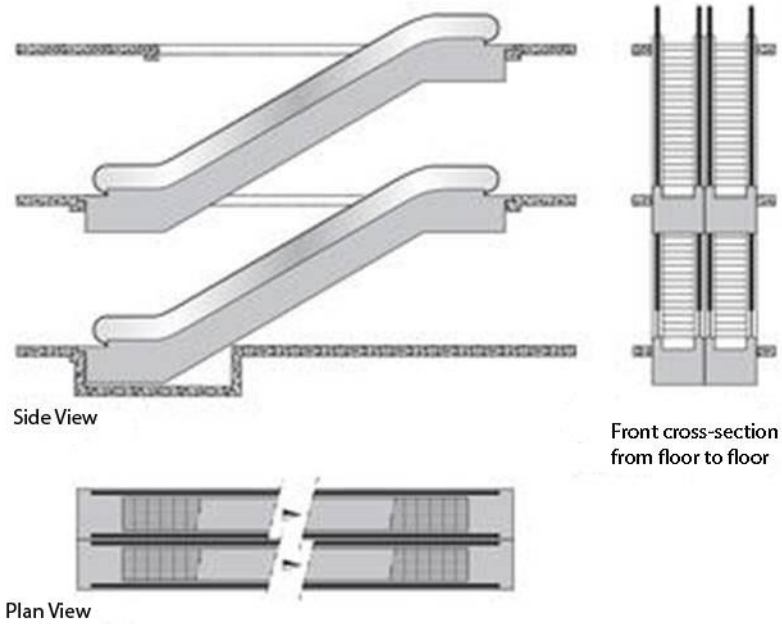

Elevator Traffic Analysis

Elevator Traffic Analysis Factors

Building Parameters

- General
- Specific

Design Criteria

- Interval / Waiting Time
- Five Minute Handling Capacity
- Destination Time

Population Densities

Population Traffic Patterns

General Building Parameters

Basic Building Data

- **Building Type**: Office, hotel, residential, mixed-use, museum, garage, retail health care facility and industrial
- **Location**: Urban or suburban
- **Building Profile**: Number of floors, floor-to floor heights, MER locations, single or multiple main lobby levels, bridge and underground connections to adjacent buildings
- **Accessibility**: Adjacent mass transportation facilities or basic car and bus transportation
- **Traffic Patterns**

Specific Building Parameters

Building Type	Building Data
• Office:	Speculative / single occupant / headquarters / GSA Trading floors/densely populated data centers Size of floor plates / Walking Distances / Number of Passenger Elevator Cores Special function spaces: cafeteria / meeting rooms / conference center / VIP levels / fitness center
• Residential:	Standard / luxury/ Parking garage Amenities: meeting rooms / party rooms/ fitness center / roof top facilities
• Hotel	Star rating of the Hotel /Operator requirements /Boutique/convention / resort / urban hotel / Parking requirements Special function spaces: restaurants / meeting rooms / fitness center / roof top facilities such as bars /Room service requirements /Extended stay rooms

Additional Building Parameters

Define a specific traffic pattern for the subject building.

Interactive usage by the populations

- Arrival time fluctuations
  - Absenteeism
  - Weather
  - Flexible work times
- Interfloor traffic
- Counterflow Traffic
- Cafeteria, meeting rooms, library, event floors

Elevator Design Criteria

The following factors determine the efficiencies of the elevator systems:

- Interval and Waiting time
- Handling (Carrying) Capacity
- Time to Destination (From Hall Call registration to Arrival at Destination Floor)

Interval / Waiting Time

- In conventional manual or computerized elevator traffic studies, **Interval** is used to project the response time of the elevators. Interval is defined as average time between the elevator departures from the main lobby. Depending on the loading conditions of the elevators, the average waiting time (AWT) is 45 to 65% of the interval.

- The traffic studies performed by elevator simulation programs provide actual passenger Waiting Times. The **Waiting Time** starts when a person registers a hall call and ends when a responding elevator arrives and starts opening its doors.

- <u>Recommended Intervals / Waiting Times:</u>

	Intervals	Waiting Times
Class "A" Office Buildings	30 seconds max	20.0 seconds max
Residential Buildings	45 to 75 seconds	30 to 45 seconds
Hotels	40 to 45 seconds	25 to 30 seconds
Garage	45 seconds	30 seconds

Five Minute Handling Capacity

Defined as percentage of the projected population transported from the main entry floors by the elevators in a five minute peak period

Recommended Five Minute Handling Capacities:

- Spec. Office Buildings: 11.5-12.5%
- Single Occupancy Office Building: Min. of 13%
- GSA Office Buildings: 16%
- Residential Buildings: 6-8%
- Hotels: 12-15%
- Parking Garage: 10%

Time to Destination

- Defined as the total time a passenger spends from registering a hall call to exiting the elevator at his destination floor
- Recommended Destination Time: 90-120 sec.
- Maximum Destination Time: 180 sec.
- Walking Distance: From elevators to the furthest office space not to exceed 150 ft.

Population Density

- **Office Buildings**: 150-225 net "BOMA" usable sq. ft./person depending on tenant population and usage. The net usable area may be calculated as a percentage of gross sq. ft., i.e., typically 75-85% of the gross area
- **Hotel**: 1.5-1.9 persons per room
- **Parking Garages**: 1.0 to 2.0 persons per automobile
- **Residential Buildings**: An average of 1.5 persons per bedroom

Population Traffic Patterns

- **Up – Peak**: Without interfloor traffic and “down” traffic: This traffic pattern typically applies to the office buildings
- **Two-Way Traffic**: Used to evaluate elevator needs of residential buildings, hotels, parking garages, museums and hospitals
- **Down - Peak Traffic**: This traffic pattern is used to evaluate elevator requirements of detached parking garages or office buildings and large assembly spaces such as hotels, convention centers, ballrooms, auditoriums and conference rooms

Rules of Thumb

Office Buildings:

- 40-50,000 sq. ft. gross floor area per passenger elevator. One service car per every 400,000 sq. ft. gross area

Hotels:

- One passenger elevator per 100 guest rooms. A minimum of one service elevator for every 200 guest rooms

Garages:

- One elevator per 300-400 parking spaces

Bank of America Tower, New York, NY

Sustainable Strategies for Elevators

Sustainable Strategies for Elevators

Over the years, technological advances in the elevator industry has made the elevator more efficient and a sustainable contributor to **GREEN** movement without actually being specifically recognized in the **LEED** point system:

- AC machines – Material, energy, environment, sites
- MRL technology – Material, energy, environment
- Dispatching algorithms - Material, energy, environment
- Fixtures - Material, energy, environment

LEED® for Commercial Interiors

Total Possible Points**	110*
Sustainable Sites	21
Water Efficiency	11
Energy & Atmosphere	37
Materials & Resources	14
Indoor Environmental Quality	17

** Out of a possible 100 points + 10 bonus points*

*** Certified 40+ points, Silver 50+ points, Gold 60+ points, Platinum 80+ points*

Innovation in Design	6
Regional Priority	4

Elevators are becoming 'GREEN'

Sustainable Strategies for Elevators

Power Saving Technology

- Elevators by nature are highly efficient, storing people as potential energy in a building in the morning, and releasing them in the evening.
- Existing technologies, when applied properly, can **optimize the energy footprint** of an elevator system.
- Motor generators and DC Gearless machines are being slowly phased out in both the new construction and modernization sectors.
- AC Gearless Machines with Variable Voltage, Variable Frequency drive technology are nearly as efficient as engineering practices allow.
- Elevator manufacturers are rapidly developing larger permanent magnet synchronous hoisting machines for the high and super high rise buildings.

(Bank of America Tower)

Sustainable Strategies for Elevators

Regenerative Drives

- The technology has been around for many years, but had until recently been considered cost prohibitive
- Braking energy from the elevators is returned to the building as useful power
- The heat that was normally dissipated in the machine room thru banks of resistors is eliminated, **reducing the size of related cooling systems**

KEB Regen Drives

Magnetek Regen Drives

Sustainable Strategies for Elevators

Elevator Cab & Lighting Controls

- LED bulbs and fixtures are more energy efficient and have longer life-cycles
- Controls can be provided to turn off car accessories while waiting for a call
- Lighter weight cab materials
- DD fixtures eliminate the need for active COP's

Sustainable Strategies for Elevators

Advanced Dispatching Technology – 'Destination Dispatching'

With enhanced dispatching algorithms, such as used in **Destination Based Dispatching**, the elevator system:

- Assigns passengers to elevators traveling to same or contiguous floors
- Reduces the number of stops to final destination
- Less crowded cars providing a more comfortable ride
- Optimizes speed and capacity of elevator system designs
- Shut down elevators during periods of light demand
- Apply "energy aware" algorithms

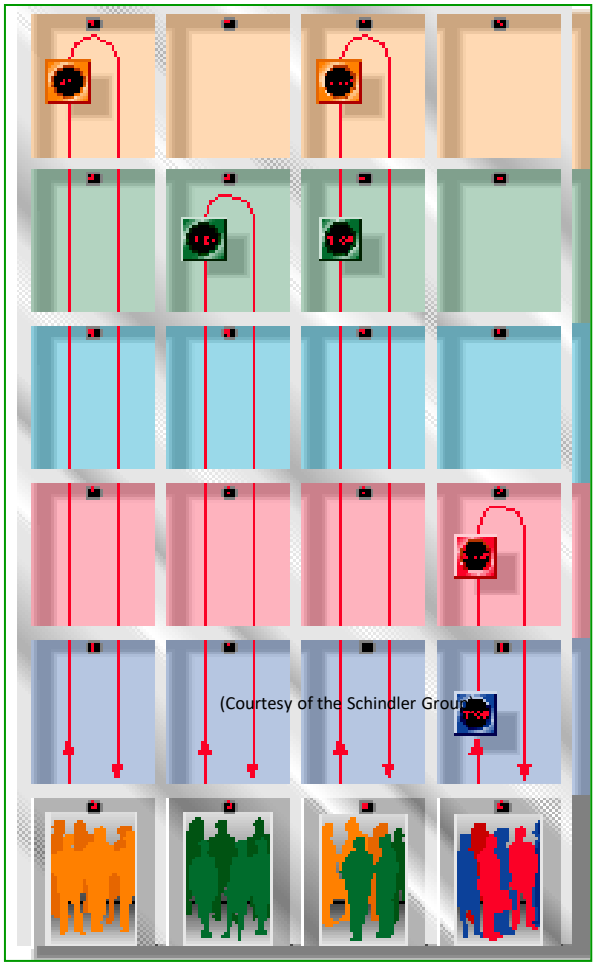

User Interface Differences 2 Button vs DD

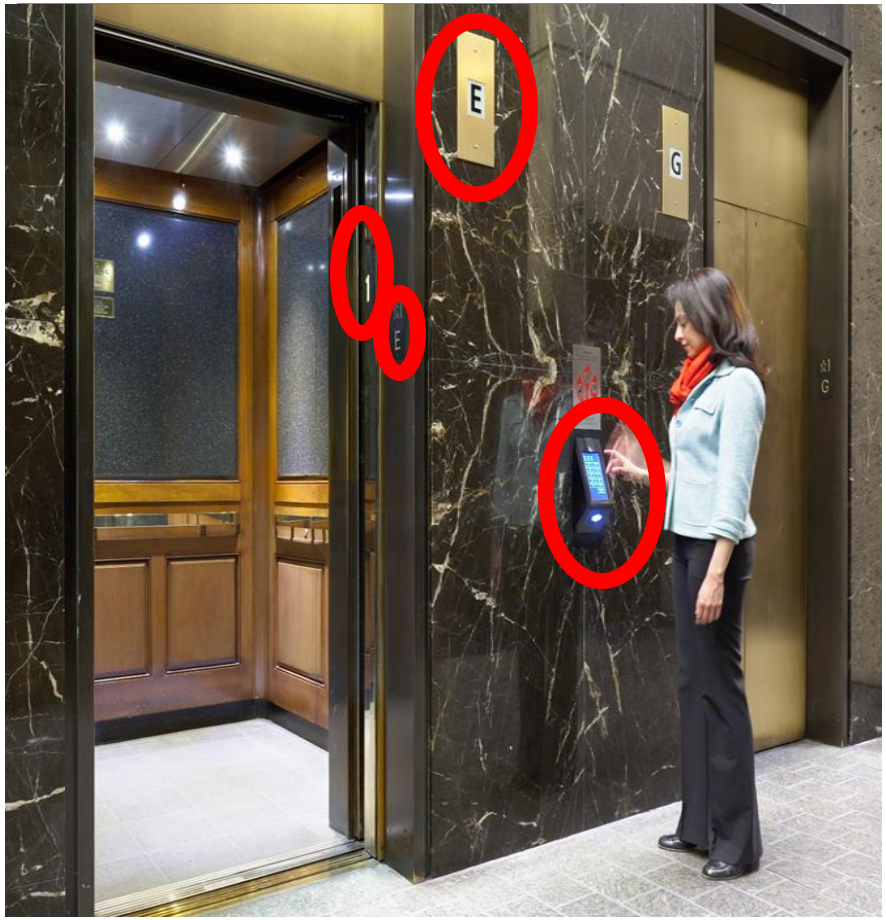

Destination Dispatching

- **Keypad or touch screens**
  - Quantity depending on building population.
  - Typical floor requires 1-2 units
  - Main Lobby may require as many as 3-4 devices (Outside Bank)
- **Static Car identification letters above or @ side of each entrance**
- **Car jamb registration indicator**
- **Additional Braille tag**
- **No Car Registrations Buttons**

Thank You

Questions?

Local Michigan Resources

Dion Cooper
Senior Associate
dcooper@vdassoc.com
313-518-3219

Brian Moran
Associate
bmoran@vdassoc.com
586-419-2301

- New Construction
- Modernization
- Program Management
- Maintenance Quality Control
- Equipment Evaluations
- Contract Administration
- Adaptive Reuse
- Peer Review